ARISTON

SPARE PARTS EXPLODED VIEW
STORAGE ELECTRIC WATER HEATERS

Model

VELIS LUX INOX PW ABSE WIFI

R8218949-01 - 20/12/2022

EN | **FR** | **IT** | **ES** | **DE** | **NL**

Col	Reference	Model type	Begin	End
1	3700673	VELIS LUX INOX PW ABSE WIFI 30	04-2021	-
2	3700674	VELIS LUX INOX PW ABSE WIFI 50	04-2021	-
3	3700675	VELIS LUX INOX PW ABSE WIFI 80	04-2021	-
4	3700676	VELIS LUX INOX PW ABSE WIFI 100	04-2021	-

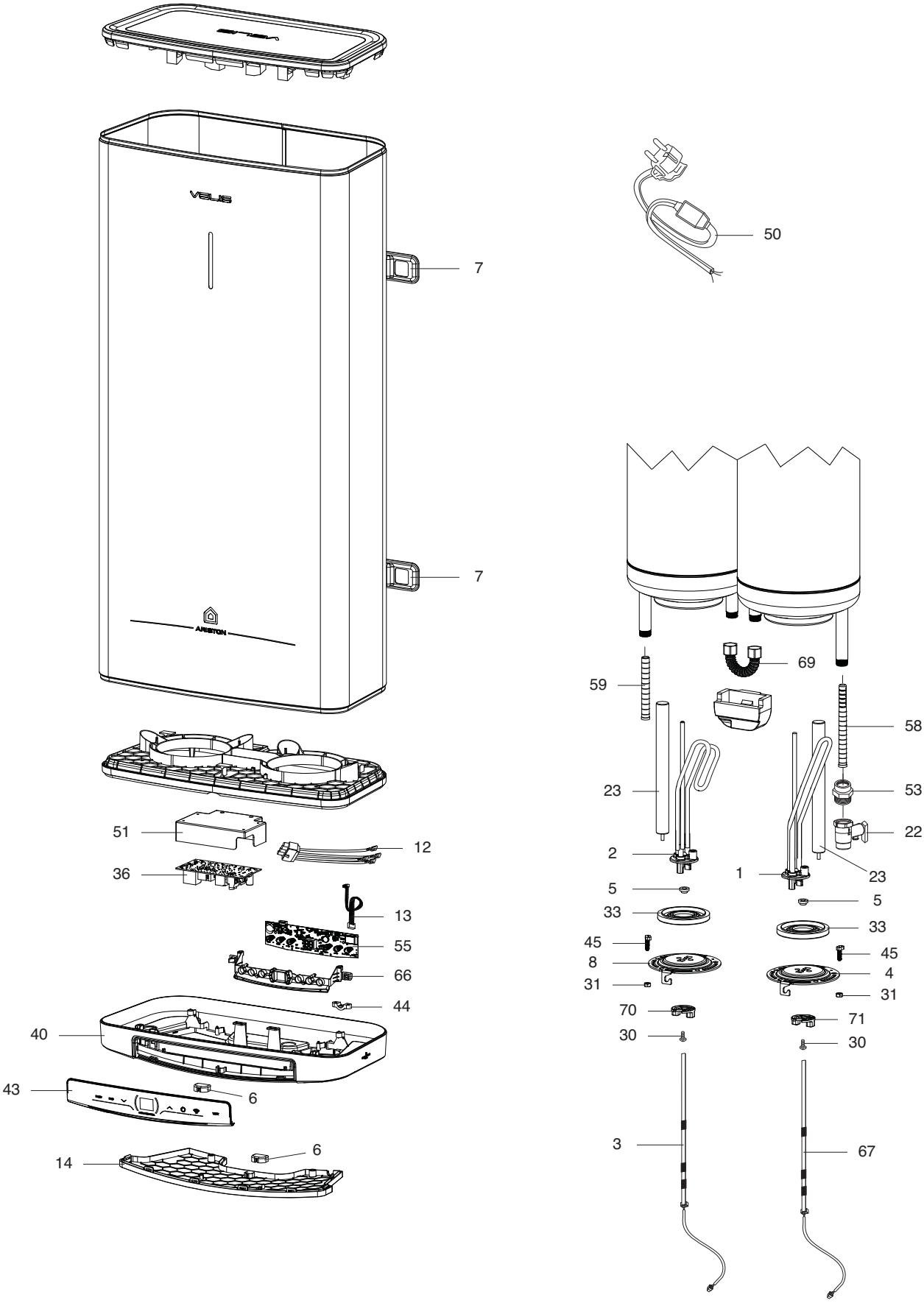
7
7
50
51
12
36
13
55
66
44
40
43
6
14
6
69
59
58
23
53
22
2
1
23
5
5
33
33
45
45
8
4
31
31
70
71
30
30
3
67

R8227479

	Description	Manf. Pt. N	Type	VE. LUX INOX PW 30	VE. LUX INOX PW 50	VE. LUX INOX PW 80	VE. LUX INOX PW 100																	31	
				1	2	3	4	5	6	7	8	9	10	11	12	13	14	15	16	17	18	From	to
0001	НАГРЕВАТЕЛЬНЫЙ ЭЛЕМЕНТ 1000W 230V	65180040		●	●	●	●																
0002	НАГРЕВАТЕЛЬНЫЙ ЭЛЕМЕНТ 1500W 230V	65180069		●	●	●	●																
0003	ДАТЧИК ТЕМПЕРАТУРЫ (OUTLET TANK)	65153300		●	●	●	●																
0004	ФЛАНЕЦ (5 БОЛТОВ)	65180159		●	●	●	●																
0005	ШАЙБА ПЛАСТИКОВАЯ	65180158		●	●	●	●																
0006	ВОДОЗАЩИТНЫЙ КОЛПАК	65180442		●	●	●	●																
0007	КРОНШТЕЙН	65152905		●	●	●	●																
0008	ФЛАНЕЦ (5 БОЛТОВ)	65180160		●	●	●	●																
0012	КАБЕЛЬ (НАГР. ЭЛЕМЕНТ/ОСНОВНАЯ ПЛАТА)	65180072-01		●	●	●	●																
0013	КАБЕЛЬ ДИСПЛЕЯ	65115286		●	●	●	●																
0014	КРЫШКА ПЛАСТИКОВАЯ	65180444		●	●	●	●																
0022	ПРЕДОХРАНИТЕЛЬНЫЙ КЛАПАН (1/2'' 6 БАР)	65151712		●	●	●	●																
0023	МАГНИЕВЫЙ АНОД D:21,3 L:180 M5	65180015		●	●	●	●																
0030	ВИНТ M6X12	993000		●	●	●	●																
0031	ГАЙКА M6	994140		●	●	●	●																
0033	ПРОКЛАДКА ФЛАНЦА	65111788		●	●	●	●																
0036	ОСНОВНАЯ ПЛАТА	65116249		●	●	●	●																
0040	КРЫШКА ПЛАСТИКОВАЯ НИЖНЯЯ	65180441		●	●	●																	
	КРЫШКА ПЛАСТИКОВАЯ НИЖНЯЯ	65180462					●																
0043	ПАНЕЛЬ УПРАВЛЕНИЯ	65154944		●	●	●	●																
0044	ЗАЖИМ ДЛЯ КАБЕЛЯ	573266		●	●	●	●																
0045	ВИНТ M6X20	65151225		●	●	●	●																
0050	КАБЕЛЬ ПИТАНИЯ С УЗО (16А 1,0м)	65150965		●	●	●	●																
0051	КОРОБКА ОСНОВНОЙ ПЛАТЫ	65155810					●																
	КОРОБКА ОСНОВНОЙ ПЛАТЫ	65152908		●	●	●																	
0053	ДИЭЛЕКТРИЧЕСКИЙ ПЕРЕХОДНИК 1/2'' (2 ШТ.)	65116403		●	●	●	●																
0055	ПЛАТА ДИСПЛЕЯ	65120771		●																			
	ПЛАТА ДИСПЛЕЯ	65120772			●																		
	ПЛАТА ДИСПЛЕЯ	65120773				●																	
	ПЛАТА ДИСПЛЕЯ	65120774					●																
0058	РАССЕКАТЕЛЬ ВОДЫ (1/2'' H=159)	65152176		●	●	●	●																
0059	РАССЕКАТЕЛЬ ВОДЫ (1/2'' H=100)	65152177		●	●	●	●																
0066	ФИКСАТОР ПЛАТЫ ДИСПЛЕЯ	65180443		●	●	●	●																
0067	ДАТЧИК ТЕМПЕРАТУРЫ (INLET TANK)	65153301		●	●	●	●																
0069	ТРУБКА СОЕДИНИТЕЛЬНАЯ	65152492		●	●	●	●																
0070	ИЗОЛЯТОР КЛЕММ ТЭНА (RED)	65180070		●	●	●	●																
0071	ИЗОЛЯТОР КЛЕММ ТЭНА (BLUE)	65180068		●	●	●	●																

LIST OF THE ABBREVIATIONS

HW	:	Hot water.
CW	:	Cold water.
C	:	Ceramic resistance (normal heating).
Ca	:	Ceramic resistance (accelerated heating)
TP	:	Immersion heater.
1F	:	With fittings.
2F	:	Without fittings.
3F	:	With fittings and another outlet connection.
AMI	:	With mixing valve.
SMI	:	Without mixing valve.
PUISS	:	Power of th appliance.
PN	:	Appliance with normal pression.
LP	:	Appliance with low pression.
PV	:	Appliance with variable power.
PF	:	Appliance with fixed power.

IDENTIFICATION PLATE

SERIAL NUMBER

6 Characters : 03 09 08
- Year of manufacture
- Manufacturing day
- Month of manufacture

9 Characters : 5 9 12 0606
- Year of manufacture
- Month of manufacture
- Sequencial number

14 Characters : SI-V-0B0 45 07 0001
- Sequencial number
- Year of manufacture : 6 → 2004, 7 → 2005, 8 → 2006, etc ...
- Month of manufacture : 25 → January, 13 → February, 32 → March, 35 → April, 39 → May, 45 → June, 43 → July, 29 → August, 40 → September, 38 → October, 51 → November, 12 → December
- Product model

14 Characters : 111518 XX 000010
- Month of manufacture
- Day of manufacture
- Sequencial number
- Year of manufacture

15 Characters : 02 11 00001 007843
- Year of manufacture
- Month of manufacture
- Product reference
- Sequencial number

21 Characters : 3200050 XX 08115 0000001
- Product reference
- Sequencial number
- Year (08) / Manufacturing day (115)

22 Characters : 3200050 XX 070115 0000001
- Product reference
- Sequencial number
- Year (07) / Month (01) / Manufacturing day (15)

The indications mentionned on the prices, commercial or technical literature and the scheme are written for your guidance and are available at a given time. The CONSTRUCTOR retains the power to modify the presentation, the form, the size, the conception or the material of the products.